CCII Systems (Pty) Ltd Registration No. 1990/005058/07

Communications
Computer Intelligence
Integration

Hardware Reference Manual

for the

MIL-STD-1553B Adapter

C²I² Systems Document No.	CCII/1553/6-MAN/002
Document Issue	0.2
Issue Date	2009-12-09
Print Date	2009-12-09
File Name	W:\1553\TECH\MAN\C53MAN02.WPD
Distribution List No.	

© C²I² Systems The copyright of this document is the property of C²I² Systems. The document is issued for the sole purpose for which it is supplied, on the express terms that it may not be copied in whole or part, used by or disclosed to others except as authorised in writing by C²I² Systems.

Document prepared by C²I² Systems, Cape Town

Signature Sheet

Name	Signature	Date
Completed by A Davids	Project Engineer Board-Level Products C²I² Systems	2009-12-17
Accepted by W. de Waal	Project Manager Board-Level Products C²I² Systems	2009-12-17
Accepted by X. Kruger	Quality Assurance C²I² Systems	2009-12-17

Signature Sheet

Name	Signature	Date
Completed by		
	Project Engineer Board-Level Products C²I² Systems	
Accepted by		
	Project Manager Board-Level Products C²I² Systems	
Accepted by		
	Quality Assurance C²I² Systems	

Amendment History

Issue	Description	Date	ECP No.
0.1	First Issue.	2009-12-08	-
0.2	Added more technical information to the document	2009-12-09	-

Contents

1. **Scope** 1
   1.1 Identification 1
   1.2 System Overview 1
   1.3 Document Overview 1

2. **Applicable and Reference Documents** 2
   2.1 Applicable Documents 2
   2.2 Reference Documents 2

3. **Hardware** 3
   3.1 Architecture 3
   3.2 Formfactor 3
   3.3 Block Diagram 4
   3.4 Operating Modes 4
   3.5 Interfaces 4
      3.5.1 Frontpanel I/O 5
      3.5.2 Backplane I/O 6
      3.5.3 LED Indicator Information 7
   3.6 Configuration 7
      3.6.1 Configuration Jumpers 7

Annexure A 9
   Product Specification 9

Annexure B 11
   MIL-STD-1553B Data Bus Example 11

Annexure C 15
   Connector Location and LED Information 15

Figure List

Figure 1 : Conduction-Cooled Adapter with Backplane I/O 3
Figure 2 : Air-Cooled Adapter with Frontpanel I/O 3
Figure 3 : Block Diagram 4
Figure 4 : Interface Diagram 5
Figure 5 : Front View of Frontpanel Adapter 6
Figure 6 : Rear View of Frontpanel Adapter 6
Figure 7 : Jumper Pin Descriptions 8
Figure 8 : Cable with Triaxial BNC Connectors 11
Figure 9 : Bus Coupler 11
Figure 10 : Bus Coupler Terminator 12
Figure 11 : Triaxial BNC T-Junction Connector 12
Figure 12 : Triaxial BNC Male Connector 12
Figure 13 : Triaxial BNC Female Connector 13
Figure 14 : Transformer Coupled, Terminated 13
Figure 15 : Transformer Coupled 13
Figure 16 : Direct Coupled 14
Figure 17 : Transformer Coupled, Terminated 14
Figure 18 : Connector Location and LED Information 15

List of Tables

Table 1 : Pn4 Signal Names and VME Mapping Information 6
Table 2 : LED Indicator Information 7
Table 3 : J2 Configuration Jumpers 7
Table 4 : J2 Mode Configuration Jumpers 8

Abbreviations and Acronyms

BC	Bus Controller
BM	Bus Monitor
CCPMC	Conduction-Cooled PCI Mezzanine Card
FPGA	Field Programmable Gate Array
Mbit/s	Megabits per second
PCB	Printed Circuit Board
PCI	Peripheral Component Interconnect
PMC	PCI Mezzanine Card
RT	Remote Terminal

1. Scope

1.1 Identification

This document is the Hardware Reference Manual for the C²I² Systems range of MIL-STD-1553B Adapters

1.2 System Overview

The MIL-STD-1553B Adapter provides the functionality of either a Bus Controller (BC), Remote Terminal (RT) or a Bus Monitor (BM) on a MIL-STD-1553B data bus.

The MIL-STD-1553B Adapter is available in various formfactors, with frontpanel or backplane I/O options.

Applicable Part Numbers are :

CCII/1553/PMC/[1]/[2][3]/COM	Commercial Grade, PMC Formfactor
CCII/1553/PMC/[1]/[2][3]/IND	Industrial Grade, PMC Formfactor
CCII/1553/PMC/[1]/[2][3]/RGD	Ruggedised Grade, PMC Formfactor
CCII/1553/PMC/[1]/BP/CC	Conduction-Cooled Grade, CCPMC Formfactor

Where :

[1] is one of RT, BC or BM, denoting Remote Terminal, Bus Controller or Bus Monitor respectively.

[2] is one of P, PS, R, RS, W, WS, FL or FLS, denoting the connector keying and interface for Channel A.

[3] is one of P, PS, R, RS, W, WS, FL or FLS, denoting the connector keying and interface for Channel B.

For example, CCII/1553/PMC/BM/PFLS/COM is a Commercial Grade PMC Bus Monitor with P keying on Channel A and FL keying on Channel B, supporting transformer (long stub) coupling on Channel A and direct (short stub) coupling on Channel B.

1.3 Document Overview

This document describes the functional building blocks and serves as a reference for the jumper settings and connector pinouts for the C²I² Systems MIL-STD-1553B Adapter.

2. Applicable and Reference Documents

2.1 Applicable Documents

2.1.1 *Core1553BRM MIL-STD-1553 BC, RT and MT Datasheet*, v 5.0 dated December 2005.

2.1.2 *Core1553BRM User's Guide*, dated June 2004.

2.1.3 *Core1553BRM Product Handbook*, dated November 2004.

2.1.4 MIL-STD-1553B, *Aircraft Internal Time Division Command/Response Multixplex Data Bus*, dated 1978-09-21.

2.1.5 MIL-STD-1553B Notice 1, dated 1980-02-12.

2.1.6 MIL-STD-1553B Notice 2, dated 1986-09-08.

2.1.7 MIL-STD-1553B Notice 3, dated 1993-01-31.

2.1.8 MIL-STD-1553B Notice 4, dated 1996-01-15.

2.2 Reference Documents

2.2.1 *Trompeter Products Catalog - T21 Military\Aerospace.*

2.2.2 MIL-HDBK-1553A, *Multiplex Applications Handbook*, dated 1998-11-1.

2.2.3 *MIL-STD-1553B Current and Emerging Standards, ILC Data Device Corporation*, dated 1992.

3. Hardware

3.1 Architecture

The MIL-STD-1553B Adapter uses two Actel Field Programmable Logic Devices (FPGAs). The first functions as a Peripheral Component Interconnect (PCI) interface and the second contains the Actel Core1553BRM MIL-STD-1553B core. The Actel CORE1553BRM Datasheet [2.1.1], User's Guide [2.1.2] and Product Handbook [2.1.3] can be consulted for further information.

3.2 Formfactor

The MIL-STD-1553B Adapter is currently available in PCI Mezzanine Card (PMC) and Conduction-Cooled PMC (CCPMC) formfactors. The same Printed Circuit Board (PCB) is used for both these formfactors.

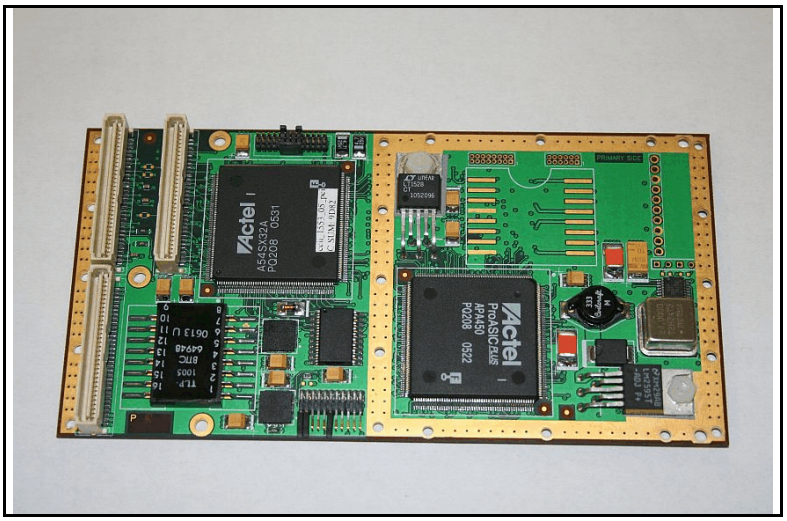

Figure 1 : Conduction-Cooled Adapter with Backplane I/O

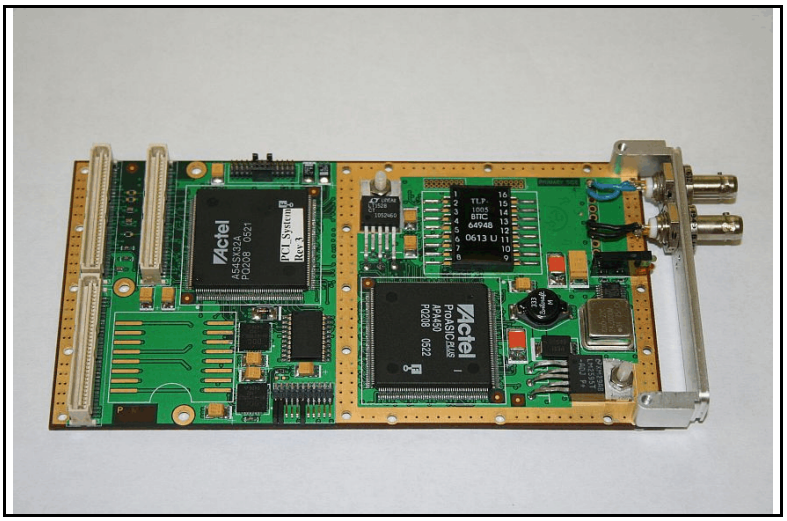

Figure 2 : Air-Cooled Adapter with Frontpanel I/O

3.3 Block Diagram

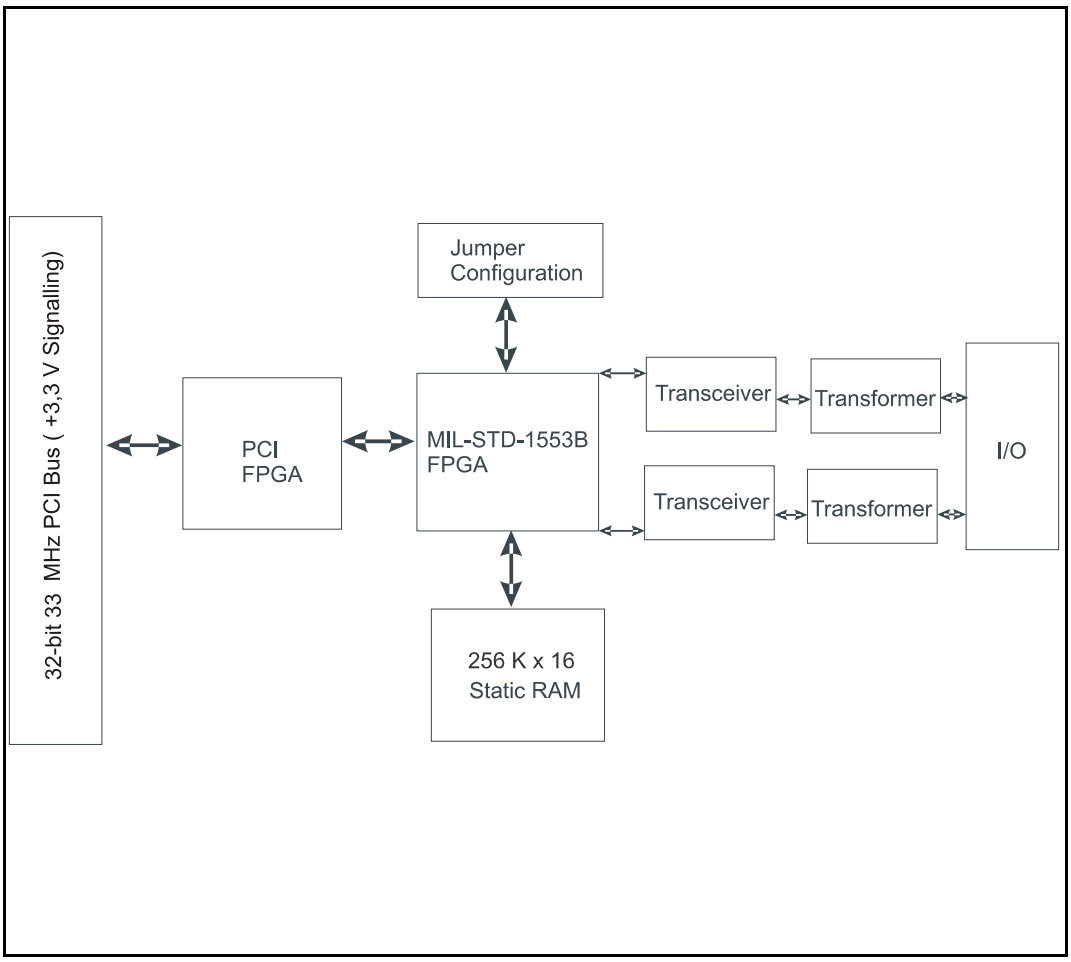

Figure 3 : Block Diagram

3.4 Operating Modes

The MIL-STD-1553B Adapter can function as a RT, BC or BM, depending on the part number and the jumper configuration.

- A RT (part number CCII/1553/PMC/RT/...) can only function as a RT, irrespective of jumper settings.
- A BC (part number CCII/1553/PMC/BC/...) can function as a RT or an BC, but not as a BM. Selection of RT or BC mode is done via the Mode 0 jumper (Mode 1 jumper has no effect).
- A BM (part number CCII/1553/PMC/BM/...) can function as a RT, BC, BM or BM+RT.

3.5 Interfaces

MIL-STD-1553A/B specifies both direct (short stub) and transformer (long stub) coupling to the MIL-STD-1553A/B Data Bus. The MIL-STD-1553B Adapter supports both, with a multitapped isolation transformer and onboard isolation resistors.

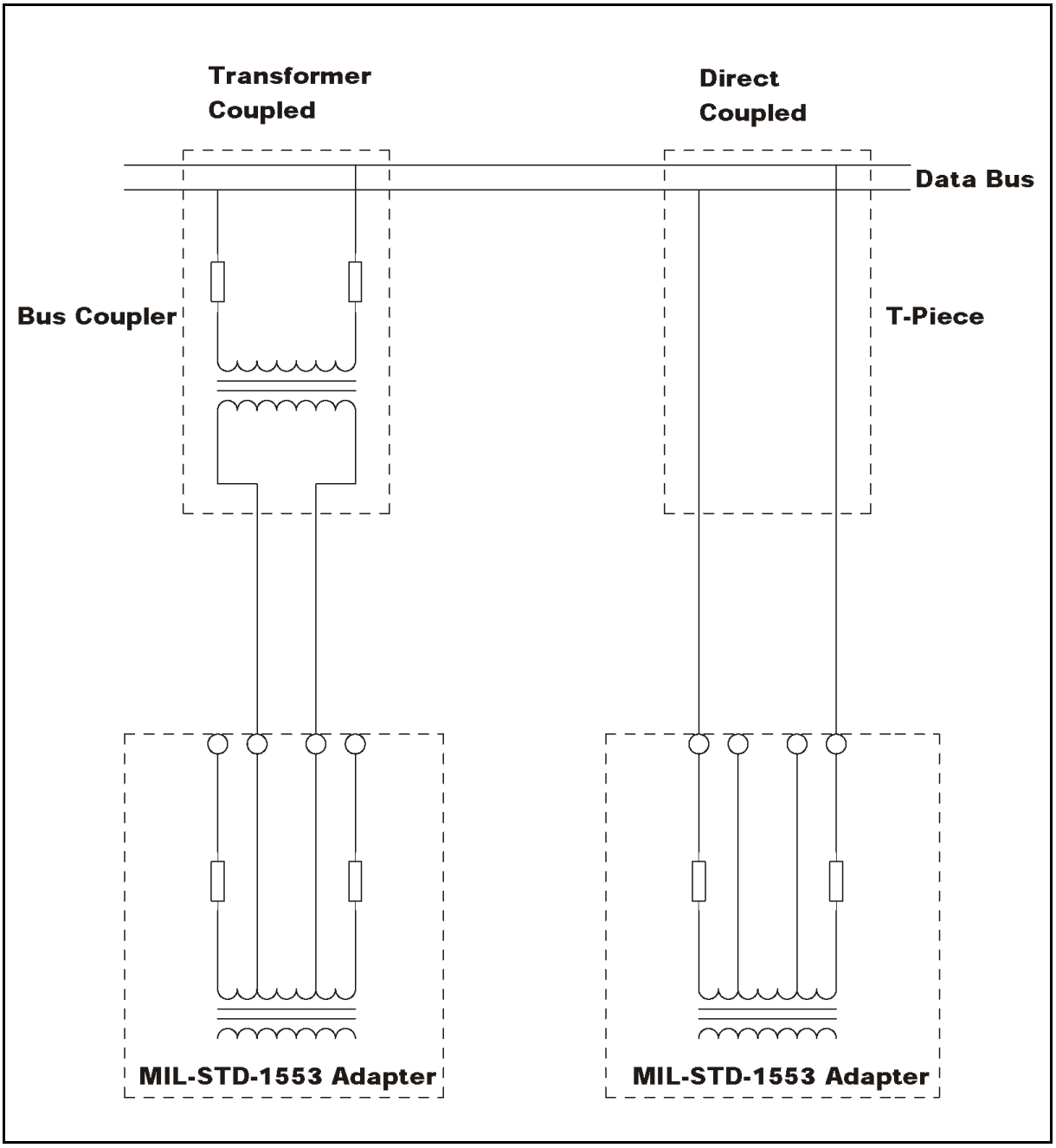

Figure 4 : Interface Diagram

3.5.1 Frontpanel I/O

The frontpanel adapter makes use of two Front Mount Bulkhead Jack connectors for connecting to the MIL-STD-1553B system. The part number for the connector is BJ457PS and more detailed information can be found in the document referred to in Paragraph 2.2.1.

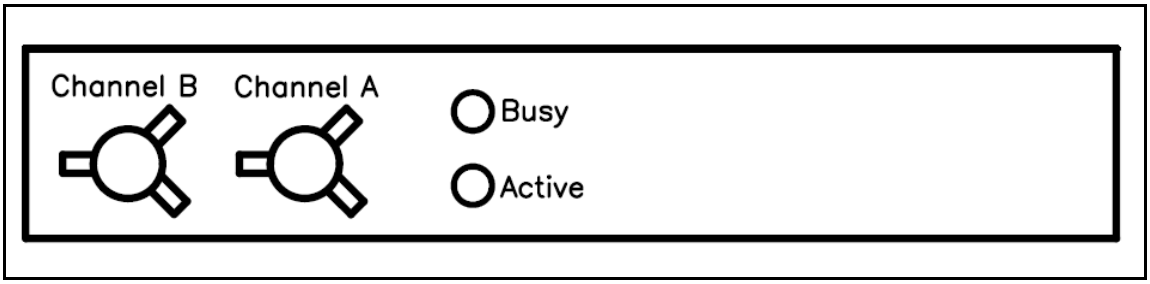

Figure 5 : Front View of Frontpanel Adapter

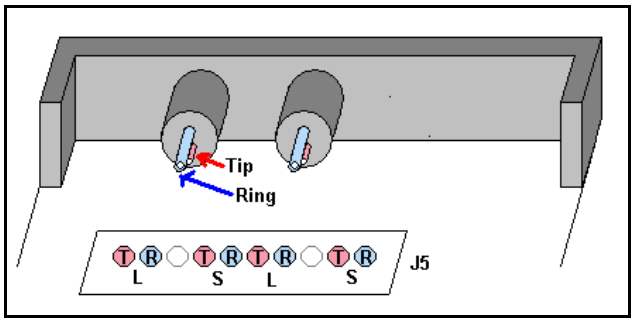

Figure 6 : Rear View of Frontpanel Adapter

3.5.2 Backplane I/O

Pn4 Signal Pin Names and Mapping Information to the VME Backplane		
Pn4 Pin Number	**VME Backplane Pin Number**	**Signal Name**
1	C1	Channel A Tip (Short Stub)
2	A1	Channel A Tip (Long Stub)
3	C2	Channel A Ring (Short Stub)
4	A2	Channel A Ring (Long Stub)
61	C31	Channel B Ring (Short Stub)
62	A31	Channel B Ring (Long Stub)
63	C32	Channel B Tip (Short Stub)
64	A32	Channel B Tip (Long Stub)

Table 1 : Pn4 Signal Names and VME Mapping Information

3.5.3 LED Indicator Information

Indicator	Description
LD1 : A	Busy (Frontpanel I/O Adapter)
LD1 : B	Active (Frontpanel I/O Adapter)
D3	RT Address Error
D4	Memory Fail
D5	Active
D6	Operating Mode 1
D7	Busy
D8	Operating Mode 0
D9	+2,5 V Power LED
D10	+3,3 V Power LED
D11	+5,0 V Power LED

Table 2 : LED Indicator Information

Please refer to Figure 18 for the LED locations.

3.6 Configuration

3.6.1 Configuration Jumpers

J2 Configuration Jumpers	
Pin Number	**Signal Name**
1,2	RT Address 0
3,4	RT Address 1
5,6	RT Address 2
7,8	RT Address 3
9,10	RT Address 4
11,12	RT Address Parity
13,14	Mode 0
15,16	Mode 1
17,18	MIL-STD-1553A
19,20	Override
21,22	Subsystem Flag

Table 3 : J2 Configuration Jumpers

To assert any of the signals identified in Table 3, fit a jumper at the required position. Please refer to Figure 18 for the connector location.

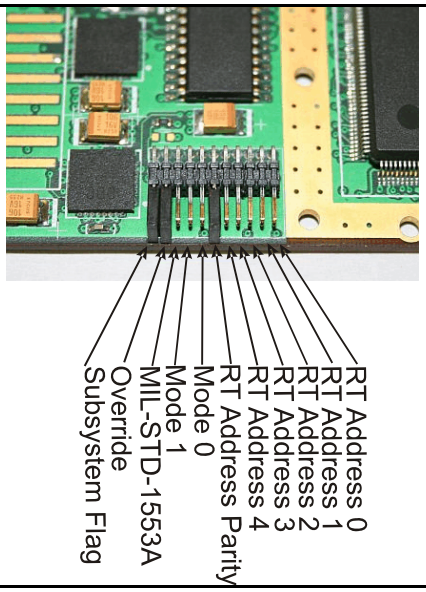

Figure 7 : Jumper Pin Descriptions

RT Address 0 to RT Address 4 and RT Address Parity sets the RT Address. Odd Parity is required.

Mode 0 and Mode 1 set the operating mode when supported.

- RT : Mode 0 and Mode 1 have no effect.
- BM : Mode 0 selects RT or BC. Mode 1 has no effect.
- BC : Mode 0 and Mode 1 selects RT, BC, BM or BM+RT.

Operating Mode Configuration		
Mode 1	**Mode 0**	**Operating Mode**
Jumper not present	Jumper not present	Bus Controller
Jumper not present	Jumper present	Remote Terminal
Jumper present	Jumper not present	Bus Monitor
Jumper present	Jumper present	Bus Monitor and Remote Terminal

Table 4 : J2 Mode Configuration Jumpers

MIL-STD-1553A : Inserting this jumper configures the adapter to MIL-STD-1553A. Jumper not fitted by default.

Override : Inserting this jumper allows the Software Driver to override these jumper settings. Jumper fitted by default.

Subsystem Flag : Controls the Subsystem Flag bit in the MIL-STD-1553B status word. Jumper fitted by default.

Annexure A

Product Specification

A.1 Technical Specifications

Bus Interface	32-bit, 33 MHz Electrically : PCI Rev.2.2, 3,3 V signalling (5,0 V compatible)			
I/O Addresses	Automatic assigned to the slot by PCI Rev. 2.2 Plug-and-Play.			
Interrupts	PCI INT A			
I/O Options	PMC : Front-panel I/O, sub-miniature twinaxial connectors, 3 lug, “P” keying (“R”, “W”, “FL” or threaded keyring optional) CCPMC : Rearpanel PMC Pn4 connector			
Bit Rates	1 Mbit/s, in accordance with MIL-STD-1553B			
Output	- Transformer-coupled I/O - Long or short stub coupling			
Physical	**Formfactor**	**Dimensions**		**Weight**
	PMC (IEEE Std 1386.1-2001)	149,00 mm x 74,00 mm, conforming to CMC height envelope.		TBD
	CCPMC (ANSI/VITA 20-2001)	143,65 mm x 74,00 mm, conforming to VITA 20 height envelope.		85 g ± 10 g
Power	5,0 V at 0,8 A			
MTBF	**Figures according to MIL-HDBK-217F, Parts Count Method**			
	Ground, Mobile Naval, Sheltered Airborne, Inhabited Cargo	T_j = 65 C T_j = 60 C T_j = 75 C	T_a = 45 C T_a = 40 C T_a = 75 C	20 000 hrs 28 000 hrs 21 000 hrs
Software Drivers	VxWorks			
Options	• Other software drivers • Can be combined with other serial I/O, e.g. RS232, RS422, RS485, CANbus, Gigabit Ethernet, Fibre Channel, etc.			

A.2 Environmental Specifications

	Air-Cooled			Conduction-Cooled
Grade	**Commercial**	**Industrial**	**Ruggedised**	**Ruggedised**
Temperature -Operating -Storage	 0 C to +55 C -40 C to +85 C	 -15 C to +75 C -40 C to +85 C	 -40 C to + 85 C -55 C to +125 C	 -40 C to + 85 C -55 C to +125 C
Humidity	0% - 90%	0% - 95%	0% - 95%	0% - 95%
Shock	not specified	30 g peak for 11 ms	40 g peak for 11 ms	40 g peak for 11 ms
Vibration -Sine -Random	 2 g (peak) 10 Hz to 100 Hz 0,04 g^2/Hz at 15 Hz to 2 kHz	 10 g (peak) 5 kHz 0,1 g^2/Hz at 15 Hz to 2 kHz	 10 g (peak) 5 Hz to 2 kHz 0,1 g^2/Hz at 15 Hz to 2 kHz	 10 g (peak) 5 Hz to 2 kHz 0,1 g^2/Hz at 15 Hz to 2 kHz

Annexure B

MIL-STD-1553B Data Bus Example

B.1 Hardware Requirements

The following hardware is required for connecting to the MIL-STD-1553B Adapter :

- MIL-STD-1553B bus cable with Triaxial BNC connectors on both sides; see Figure 8.
- Bus Coupler; see Figure 9.
- Bus Coupler Terminator; see Figure 10.
- Triaxial BNC T-Junction Connector; see Figure 11.
- Triaxial BNC Connectors should be either of the male or female type; see Figure 12 and Figure 13.

Figure 8 : Cable with Triaxial BNC Connectors

Figure 9 : Bus Coupler

Figure 10 : Bus Coupler Terminator

Figure 11 : Triaxial BNC T-Junction Connector

Figure 12 : Triaxial BNC Male Connector

Figure 13 : Triaxial BNC Female Connector

B.2 Connecting the Hardware

The hardware can be connected in the following ways :

Figure 14 : Transformer Coupled, Terminated

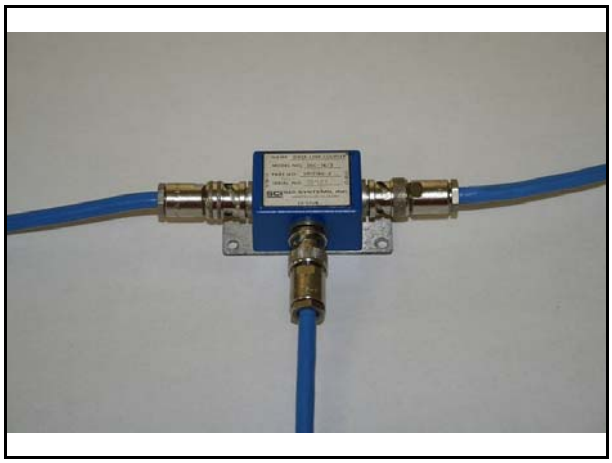

Figure 15 : Transformer Coupled

Figure 16 : Direct Coupled

Figure 17 : Transformer Coupled, Terminated

Annexure C

Connector Location and LED Information

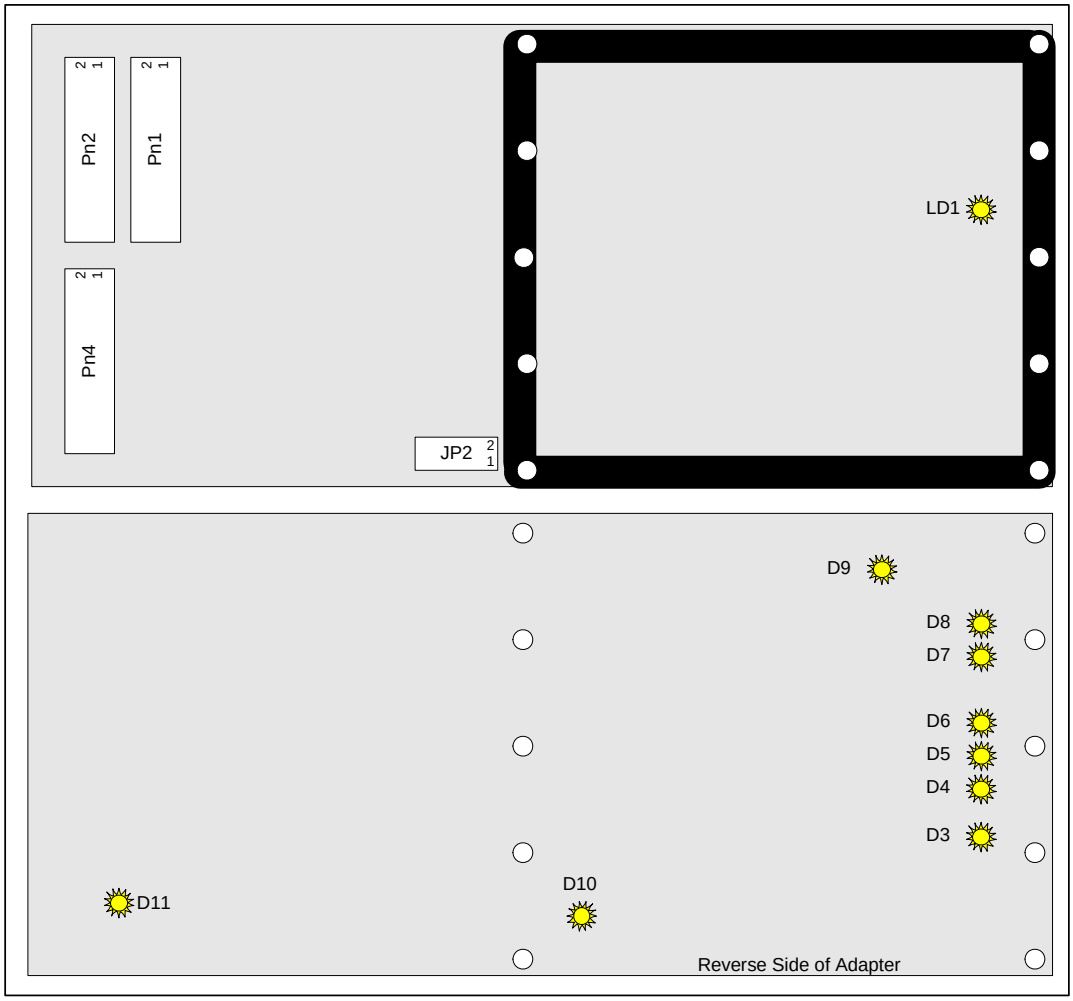

Figure 18 : Connector Location and LED Information